Project Report

Student Name:Amandeep Singh **UID:24MCA20044**
Branch:MCA **Section/Group:2/A**
Semester:4 **DOP:20/04/2026**
Subject Name: IOT **Subject Code: 24CAP-751**

Aim: To design and develop an IoT-based Smart Air Pollution Control System that monitors air quality in real-time and takes automatic actions to control pollution levels.

Objectives:

- **To monitor air pollution levels using gas sensors.**
- **To display real-time air quality data on a screen.**
- **To automate pollution control actions (like alert system or fan control).**
- **To create a low-cost and efficient smart environmental monitoring system components**

Required:

S.No	Component	Quantity
1	NodeMCU (ESP8266)	1
2	MQ Gas Sensor	1
3	DHT11 Sensor	1
4	OLED Display (0.96")	1
5	Breadboard	1
6	Jumper Wires	As required
7	Power Supply (USB)	1

Details of Components:

1. **NodeMCU:** NodeMCU (Node MicroController Unit) is a powerful and widely used open-source IoT development board based on the ESP8266 Wi-Fi module. It acts as the **brain of the entire system**, controlling all operations and managing communication between sensors and output devices.

   The ESP8266 chip has an inbuilt microcontroller and Wi-Fi capability, which allows the system to connect directly to the internet without requiring any additional hardware. This makes it ideal for IoT-based applications such as smart homes, environmental monitoring, and automation systems.

   NodeMCU supports programming through the Arduino IDE using C/C++, which makes development simple and beginner-friendly. It contains multiple digital input/output pins, one analog input pin (A0), PWM pins, UART communication, SPI, and I2C protocols, allowing it to interface with a variety of sensors and modules.

   In this project, NodeMCU performs the following tasks:

   - Reads analog data from the MQ gas sensor
   - Reads digital data from the DHT11 sensor
   - Processes the collected data
   - Displays output on the OLED screen
   - Sends real-time data to the Blynk mobile application
   - Controls alert systems based on pollution levels

   Thus, NodeMCU serves as the **central processing and communication unit** of the Smart Air Pollution Control System.

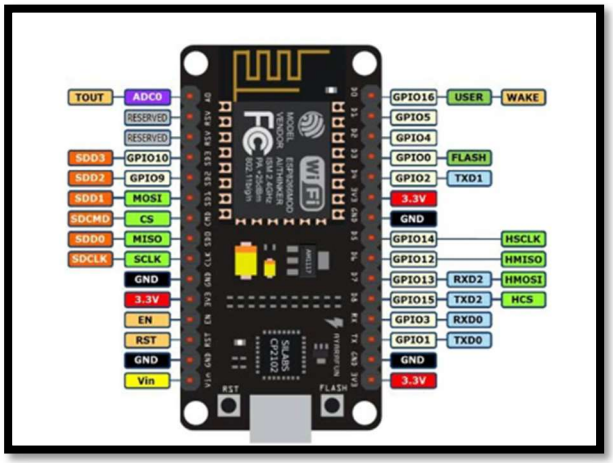

2 Gas Sensor: The MQ series gas sensor is used to detect harmful gases present in the air such as smoke, LPG, carbon monoxide (CO), methane, and other pollutants. It plays a crucial role in determining air quality in the environment.

The sensor consists of a sensitive material (usually tin dioxide, SnO_2) whose resistance changes in the presence of gas. When polluted air comes into contact with the sensor, the resistance decreases, producing a higher analog voltage output. This voltage is read by the NodeMCU through the analog pin (A0).
The MQ sensor requires a preheating time to stabilize its readings, which improves accuracy. It can detect gas concentration over a wide range, making it suitable for both domestic and industrial applications.

In this project, the MQ sensor:

- Continuously monitors air quality
- Sends analog signals to NodeMCU
- Helps classify pollution levels (GOOD, NORMAL, BAD, DANGER)
- Triggers alerts when gas concentration exceeds a threshold
  This sensor is essential for building a real-time pollution detection system.

3. DHT11 Temperature and Humidity Sensor: The DHT11 is a digital sensor used for measuring ambient temperature and humidity. It is compact, low-cost, and easy to interface with microcontrollers.

The sensor uses a capacitive humidity sensor and a thermistor to measure environmental conditions. It outputs calibrated digital data, eliminating the need for analog conversion and simplifying processing.

Although DHT11 is not extremely high precision, it is sufficient for basic environmental monitoring applications. It provides temperature in degrees Celsius and humidity as a percentage.

In this project, the DHT11 sensor:

- Measures surrounding temperature
- Measures humidity levels
- Sends digital data to NodeMCU
- Enhances the system by providing complete environmental information

Combining gas detection with temperature and humidity makes the system more reliable and informative.

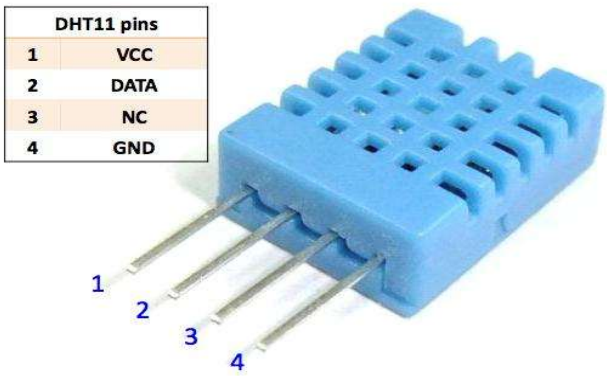

4. OLED Display (0.96" SSD1306): The OLED (Organic Light Emitting Diode) display is a compact and energy-efficient display module used to show real-time data. It communicates with the NodeMCU using the I2C protocol, which requires only two wires: SDA (data) and SCL (clock).

Unlike traditional LCD displays, OLED screens do not require a backlight, which makes them thinner, faster, and more power-efficient. They provide high contrast and clear visibility even in low-light conditions.

The OLED display used in this project has a resolution of 128x32 pixels and is capable of displaying text, numbers, and simple graphics.

In this system, OLED display:

- Shows temperature and humidity values
- Displays gas sensor readings
- Indicates air quality status (GOOD / BAD / DANGER)
- Provides instant visual feedback to the user

It acts as the main user interface of the system.

5. Breadboard: A breadboard is a reusable platform used for prototyping electronic circuits without soldering. It contains a grid of interconnected holes where components and wires can be inserted easily.

The internal structure of the breadboard connects rows and columns electrically, allowing quick and flexible circuit design. It is especially useful during the testing and development phase of projects.

In this project, the breadboard:

- Holds all components in place
- Provides electrical connections between modules
- Allows easy modification of the circuit

It simplifies the hardware setup and helps in debugging.

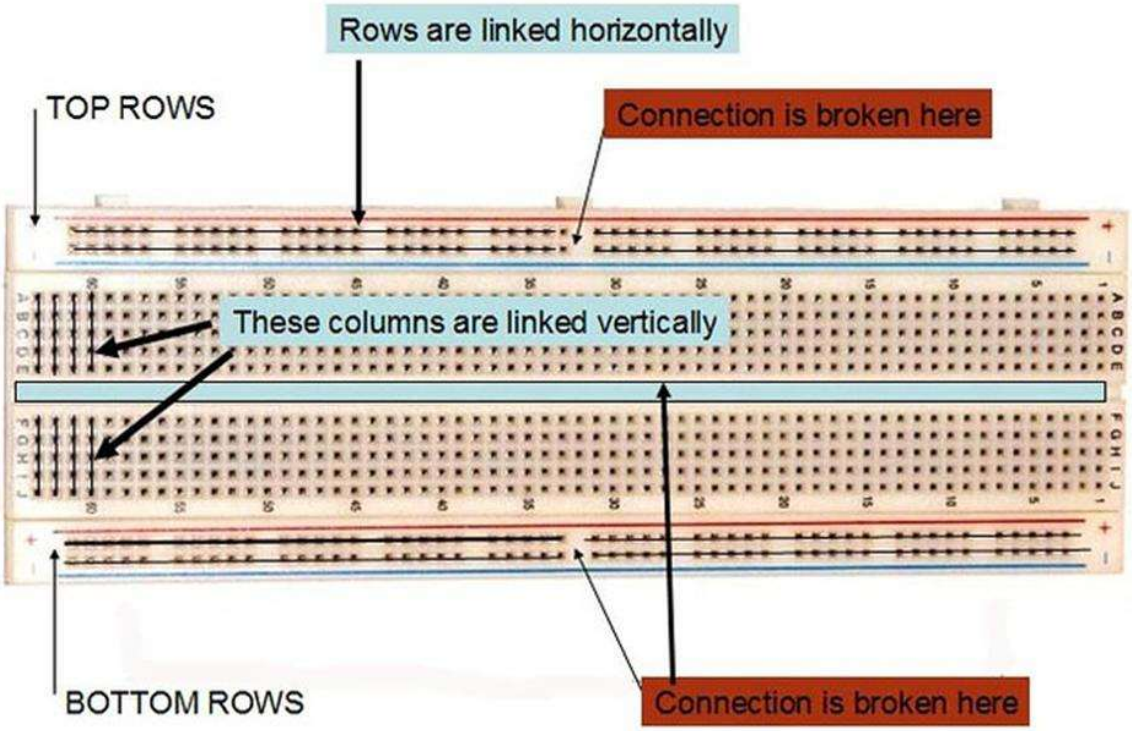

6. Jumper Wires: Jumper wires are used to establish electrical connections between components on the breadboard and the NodeMCU. They come in different types such as male-to-male, male-to-female, and female-to-female.

These wires ensure proper signal transmission and power distribution across the circuit.

In this project, jumper wires:

- Connect sensors to NodeMCU
- Link OLED display via I2C
- Provide power (VCC) and ground (GND) connections

They are essential for building the circuit.

Diagram of Designed Model:

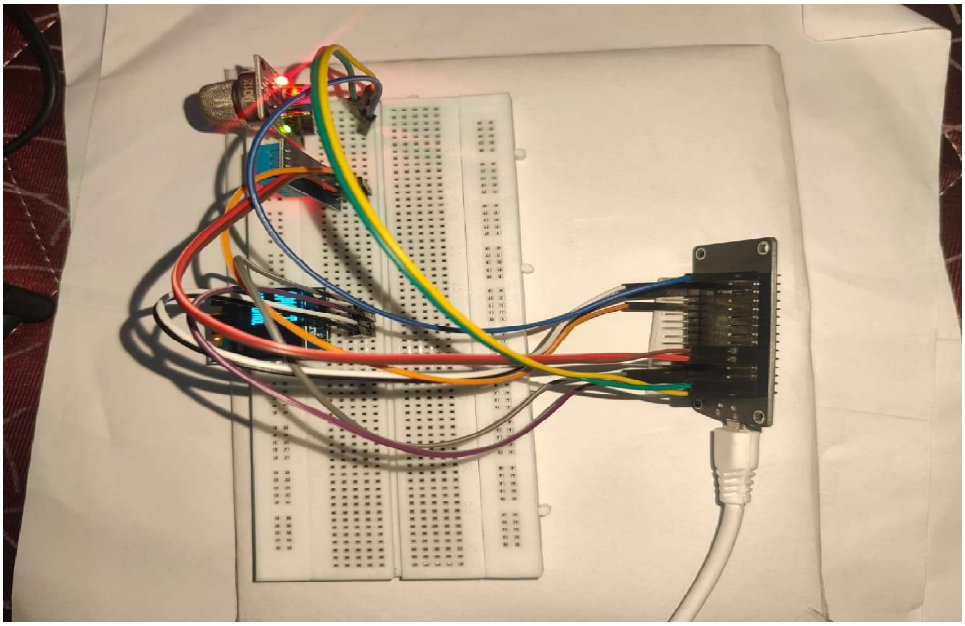

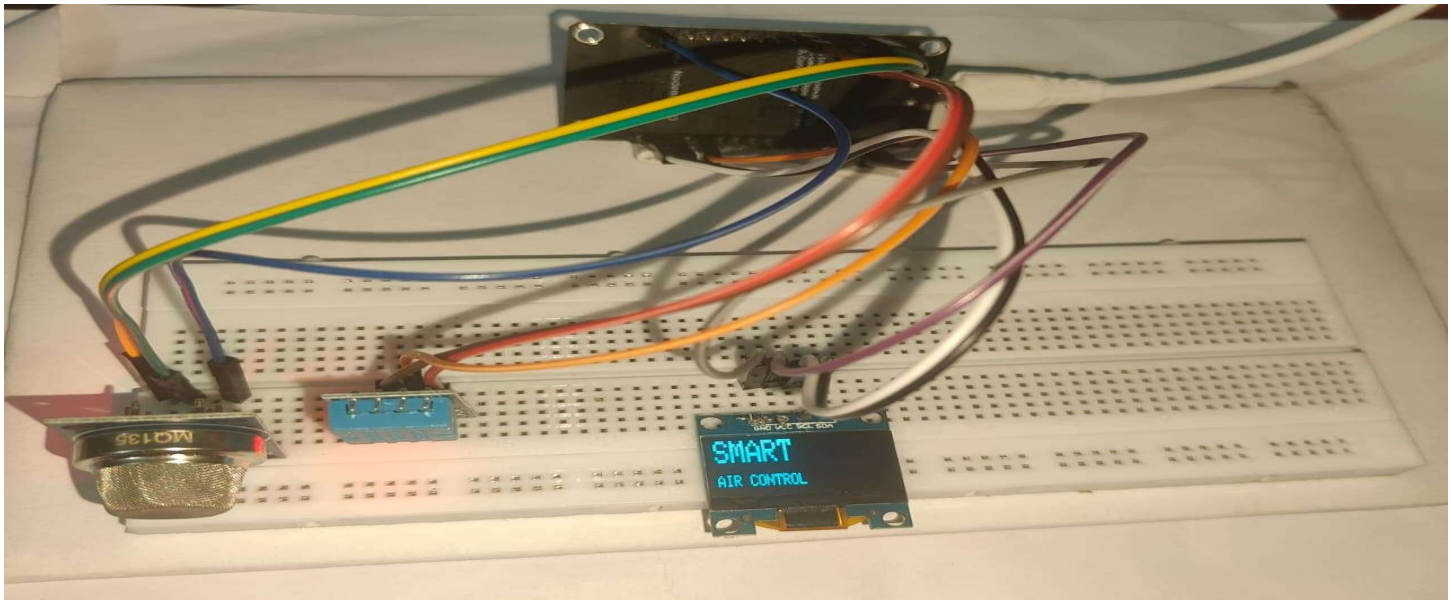

Working of Designed Model:

The designed model works on the principle of real-time sensing, processing, and response using IoT technology. The system continuously monitors environmental conditions and displays as well as transmits the data for analysis and control.

Initially, when the system is powered ON, the NodeMCU microcontroller initializes all connected components such as the MQ gas sensor, DHT11 sensor, and OLED display. The NodeMCU also establishes a connection with the Wi-Fi network to enable communication with the Blynk cloud platform.

The MQ gas sensor continuously senses the concentration of harmful gases present in the air. It produces an analog voltage output corresponding to the gas concentration, which is read by the NodeMCU through its analog input pin (A0). At the same time, the DHT11 sensor measures the surrounding temperature and humidity and sends digital data to the NodeMCU.

The NodeMCU processes the received sensor data and compares the gas values with predefined threshold levels. Based on these values, the air quality is categorized into different levels such as GOOD, NORMAL, BAD, and DANGER.

The processed data is then displayed on the OLED screen in real-time, showing:

- Temperature (°C)
- Humidity (%)
- Gas level (analog value)
- Air quality status

Simultaneously, the same data is transmitted to the Blynk mobile application via Wi-Fi, allowing users to monitor environmental conditions remotely.
If the gas concentration exceeds the safe threshold level, the system automatically triggers an alert. This alert can include:

- Displaying a warning message on the OLED screen
- Sending a notification to the mobile application
- Activating external devices such as a buzzer or fan (if connected)

The system operates continuously in a loop, updating the sensor readings at regular intervals and ensuring real-time monitoring and control of air pollution.

Thus, the designed model provides an efficient and intelligent solution for monitoring air quality and taking necessary actions to maintain a safe environment.

Output of Deigned Model/Prototype

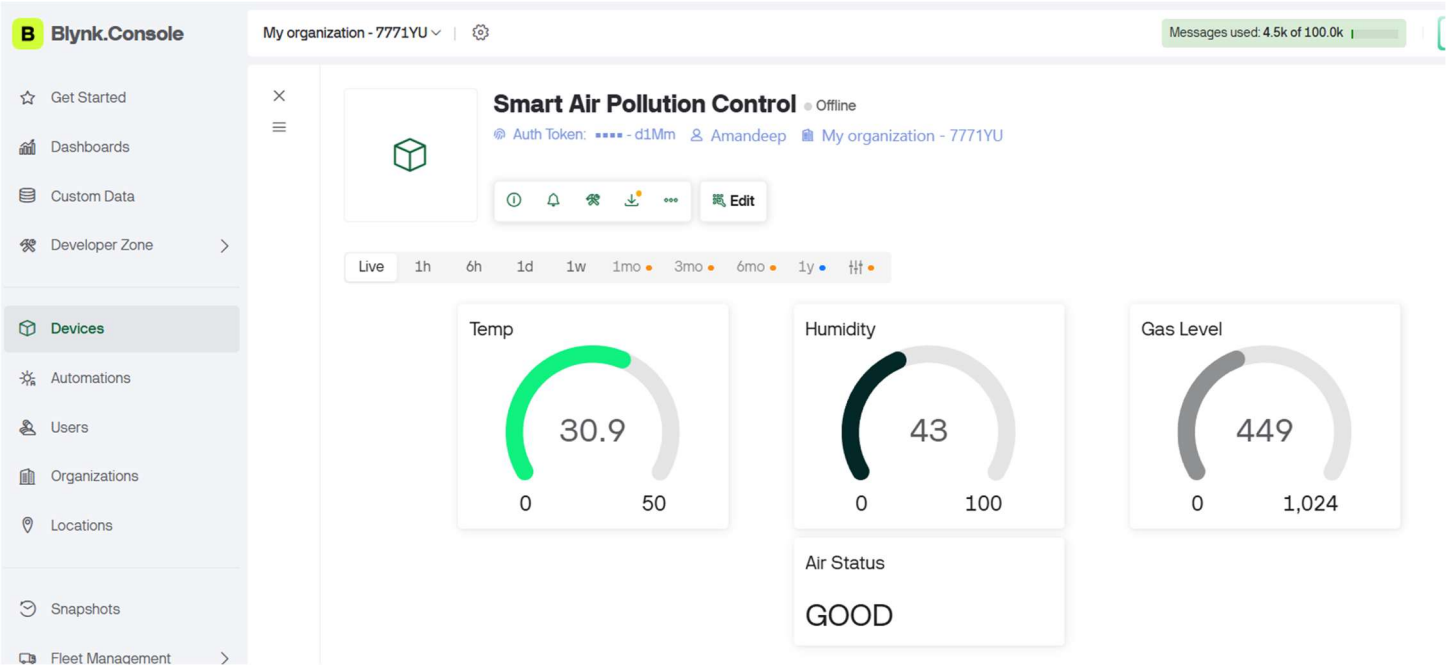

Learning outcomes (What I have learnt):

- Learned to interface sensors (MQ gas sensor and DHT11) with NodeMCU.
- Understood real-time data monitoring and display using OLED.
- Gained knowledge of IoT communication using Wi-Fi and Blynk app.
- Developed skills in building and testing electronic circuits.